Research on Two-cylinder Synchronous Lifting System of Front Lifting-up Dump Truck

Taiping Xie[1], Zhiqiang Zhao[2]

[1].Hope College, Southwest Jiaotong University, Chengdu, Sichuan, China,610400

[2.]China National Heavy Duty Truck Group Co., Ltd., Jinan, Shandong, China,620032

scncstp@126.com

Keywords: Dump Truck; improve the two-cylinder synchronous lifting system; addressing lateral stability

Abstract: At present, most front lifting-up dump trucks adopt a multi-stage sleeve-type plunger cylinder single-cylinder direct push structure. Although this type of structure has certain advantages, due to the poor working conditions of dump trucks, the lateral stability of its cargo box is poor, resulting in a large off-load torque. This often causes the lifting cylinder to become stuck or twisted, and even causes rollover and other accidents. At present, some manufacturers have improved the structure, but new problems have appeared. In order to better solve the problem of lateral stability of the cargo box, this article is based on the problems of the multi-stage sleeve-type plunger cylinder single-cylinder direct push structure of the front lifting-up dump truck, combined with the rear-mounted double cylinder lifting mechanism, and analyzed a two-cylinder synchronous lifting system for front lifting-up dump truck. This system can better solve the problem of lateral stability.

1. Introduction

Dump truck is the largest special-purpose vehicle in the market. It is mainly used to transport cargo that can be scattered, such as sand, soil, ore and crops. It can also be used to transport pieces of cargo. Dump trucks mainly serve building materials yards, mines, and construction sites. In civil engineering, due to the advantages of high mobility and mechanization of cargoes, dump trucks are usually used in combination with shovel loaders, excavators or belt conveyors, etc., to carry out joint operations to load and unload earth, sand, and loose materials. Constitute the loading, transportation and unloading production lines. This can greatly reduce loading and unloading time, improve transportation efficiency, and also save labor and reduce labor intensity [1]. Nowadays, automobiles are becoming more and more specialized. Specialized vehicles in developed countries of the automobile industry account for more than 50% of the total non-passenger vehicles. With the improvement of China's truck series and the development of the national economy, the market has put forward higher requirements for various types of special vehicles. Since the 1980s, the variety and quality of special vehicles in our country have developed rapidly, especially dump trucks, which have made great progress in terms of variety and performance. The lifting mechanism is one of the key working systems of dump trucks. The quality of its design directly affects the performance of dump trucks [2].

2. Problems Existing in the Use of Single-cylinder Direct-push Structure for Front Lifting-up Dump Trucks.

Dump trucks are essential transportation tools in engineering construction and play an important role in production and construction. The characteristics of dump trucks are the automatic dumping of goods in the cabin by the driver's operation and the use of a lifting system. The lifting system is generally composed of a control mechanism and a hydraulic transmission mechanism. It has the characteristics of complex causality, etc. In addition, the use of poor site conditions and improper operation and maintenance can cause various faults to occur frequently [3].

  DOI: 10.25236/icme.2019.035

As a kind of engineering vehicle, dump truck is often affected by the work site. Working on the ground with a slope of β, when the lifting mechanism works, as shown in Figure 1, the direction of gravity of the car will form a β angle with the central axis. During the lifting process, the center of gravity of the container will gradually rise, and the center of gravity G' will gradually move away from the center axis as the center of gravity increases. During the unloading process, the center of gravity of the remaining material is not only affected by the slope of the road, but also by the eccentric load caused by the asymmetry of the cargo distribution during loading. When the two overlap, the impact is greater, which will easily cause deformation of the frame and the lifting cylinder. In severe cases, the dump truck will lose its unloading stability and cause a rollover accident. At present, the rollover accident has become the second largest accident after the collision accident, and it does not include the damage accident of the lifting cylinder and the frame due to the unbalanced unloading stability [4].Although a few automobile manufacturers have increased the lateral stability by increasing the weight of the chassis of the medium-sized dump truck and adjusting the center of gravity, China has now ordered to prohibit this. The important reasons are: this will increase the unloaded weight and increase the amount of consumables and fuel consumption; it provides the chassis strength foundation for the dump truck overload; in addition, due to road and bridge weight restrictions, it will also affect the effective load of the dump truck.

When the dump truck is modified, because the inherent parameters of the chassis, such as the wheel-base and wheel-center-distance are fixed, only the lifting mechanism can be optimized and improved [4]. In order to reduce the center of gravity of the cargo box and improve the stability of the unloading, the dump truck has gradually developed from rear lift to front lift.

At present, most front lifting-up dump trucks adopt a multi-stage sleeve type plunger cylinder single cylinder direct push structure. This type of structure has a low center of gravity, a small distance between the cargo box and the frame, and a small initial lifting force. Due to its single-cylinder lifting, as shown in Figure 1 (the dotted line represents the cargo box), although there are multiple support points at the B end of the turning mechanism to form an overhanging beam structure with the cargo box, the lifting cylinder at the A end forms a triangle with a single cylinder Force system, under the condition that the working surface of the dump truck is uneven or the cargo is unevenly loaded, it will cause the unloading of the dump truck's cargo box. The actual center of gravity G 'of the dump truck's container will deviate from the design center of gravity G to form a cantilever beam structure, which has poor lateral stability and will generate a large amount of torque. This often causes the lifting cylinder to become stuck or twisted, or even cause a rollover.

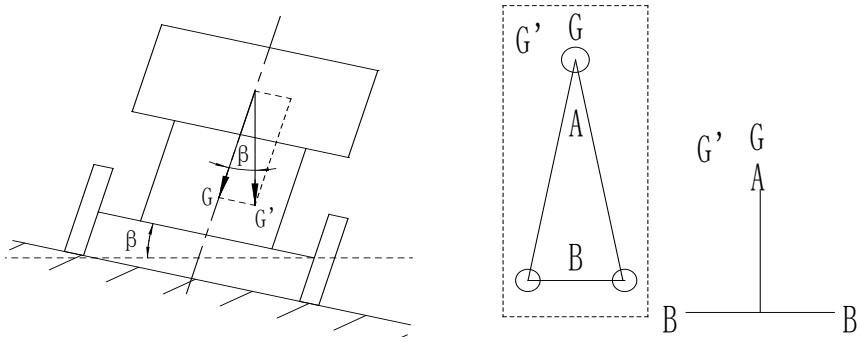

Figure 1. Center of gravity analysis of lateral stability of cargo lifting system

In order to prevent the above situation, most of the lifting cylinders are currently designed as ball hinge shaft structures. Although the ball hinge transfers part of the torque of the A-side lifting mechanism to the overhang of the B-side turning mechanism, the eccentric load is also concentrated on the B-side. And because of the swinging of the ball hinge, the A end has no lateral support ability. Although the longitudinal stability has been improved, the lateral stability will not be guaranteed.

In order to improve the lateral stability, some heavy-duty dump trucks borrowed from the rear-mounted lifting mechanism triangle-type amplification frame, and equipped with a lateral stabilizer frame, as shown in Figure 2. Although the lateral stabilizer has lateral support, it can

improve lateral stability. However, it also inherits the shortcomings of the triangular magnifying frame, increases the distance between the frame and the cargo box, and takes up a lot of space. At the same time, due to its complex structure, hidden fault points, and because it is a mechanical frame bearing, lateral load capacity is limited. Therefore, light dump trucks generally do not use lateral stabilizers, and medium dump trucks rarely use lateral stabilizers. Light-duty and medium-duty dump trucks mostly adopt rear-mounted two-cylinder direct-push structure. This type of structure is simple and takes up little space, and there is no cantilever beam structure. However, due to its high center of gravity, the required lifting force is large, the pressure resistance performance of the hydraulic system and the load bearing requirements of the frame are high, and the unloading stability is poor. It also has high requirements for the synchronization of two cylinders and poor stroke. And the longer the stroke, the more the number of stages, the greater the error in synchronization and stroke. It is difficult to meet the requirements of long stroke and multi-stage of the front-type lifting cylinder.

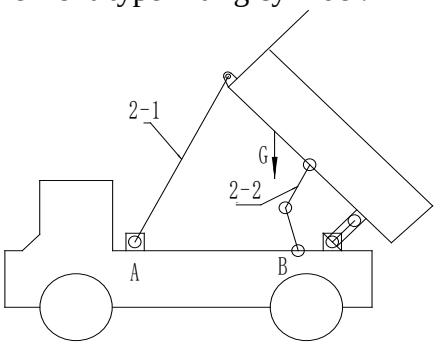

2-a Single top cylinder lift

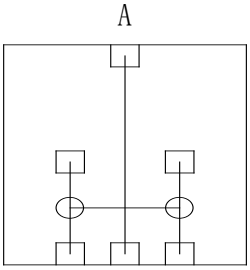

2-b Schematic diagram of lateral stabilizer

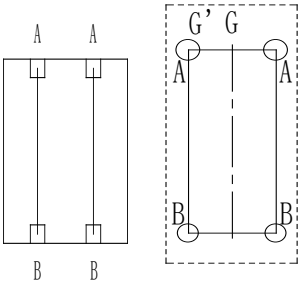

2-c Schematic diagram of front double-cylinder lifting mechanism

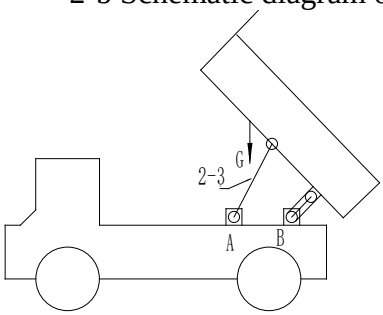

2-d Schematic diagram of rear-mounted

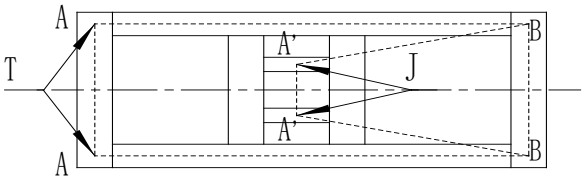

2-f Lifting mechanism in the frame installation position and lifting force diagram
2-1 Front Lifting Cylinder, 2-2 horizontal stabilizer, 2-3 rear lift cylinder.

Figure 2. Analysis of the structure and center of gravity of the front cargo box two-cylinder lifting mechanism, front single-cylinder lifting mechanism, and rear-mounted dual-cylinder lifting system

3. Research on Two-cylinder Synchronous Lifting System of Front Lifting-up Dump Truck

Aiming at the problem of the two-cylinder direct-push structure, this paper designs a front-type two-cylinder direct-push structure, as shown in Figure 2. Because the lifting force of the front structure is relatively small, an external structure is adopted, the hydraulic cylinder is placed at the frame Y, and AA/BB forms a rectangular force system (see the dotted line). The rear-mounted structure has a large lifting force and a high center of gravity. Generally, the built-in structure is adopted, and the hydraulic cylinder is placed at the frame J (the front single-cylinder lifting lateral

stabilizer is also installed here), A'A'/BB forms a trapezoidal force system (see dotted line).

At present, multi-stage sleeve type plunger cylinders mostly use a wire retaining ring to return the limit. This structure cannot control the stroke, and often the wire retaining ring falls off under the impact of external load during use. 3-6 adjustable stop rings (as shown in Figure 3) are used to connect with the cylinder barrels at all levels to facilitate adjustment. After adjusting in place, fix it with set screws to solve the problem of different strokes at all levels. At the same time, the connection is reliable and the stop ring accident is avoided.

3-5 ductile iron support ring (as shown in Figure 3) utilizes the strength and wear resistance of ductile iron to integrate the key and the support ring into a compact structure to save space. It is more durable than the plastic support ring, and it can avoid being scratched by the thread during the installation of the cylinder, without the need for an assembly tool to protect the support ring.

In order to solve the problem of synchronization of two cylinders, a synchronous branch is required. Although the structure of the throttle valve regulating circuit is simple, the accuracy is low and the cleanliness of the hydraulic oil is high. Dirt deposits and valve core wear on the valve core will affect the oil flow, which must be adjusted regularly, and maintenance is difficult.

Although the synchronous motor has relatively high accuracy, it has a complicated structure, is greatly affected by external loads, and requires horizontal installation. It is not suitable for dump trucks. Although the proportional control system has high accuracy, its hydraulic, electric and steam integration, and the complex fault points of the mechanism are hidden. It requires constant voltage source support and is not suitable for dump trucks. The diverter and collector valve can be automatically adjusted according to the pressure difference of the lift cylinder caused by the lateral eccentric load, which is less affected by external loads; the result is simple and the price is cheap; and it has been standardized, convenient to purchase, and convenient to maintain [5].

To sum up, the scheme adopts a diverting and collecting valve for synchronous control.

The guiding ideology studied in this paper is: combining the front-mounted lifting mechanism with the rear-mounted double-cylinder direct-push mechanism, which can significantly improve the lateral and longitudinal stability of the dump truck when it is unloaded.

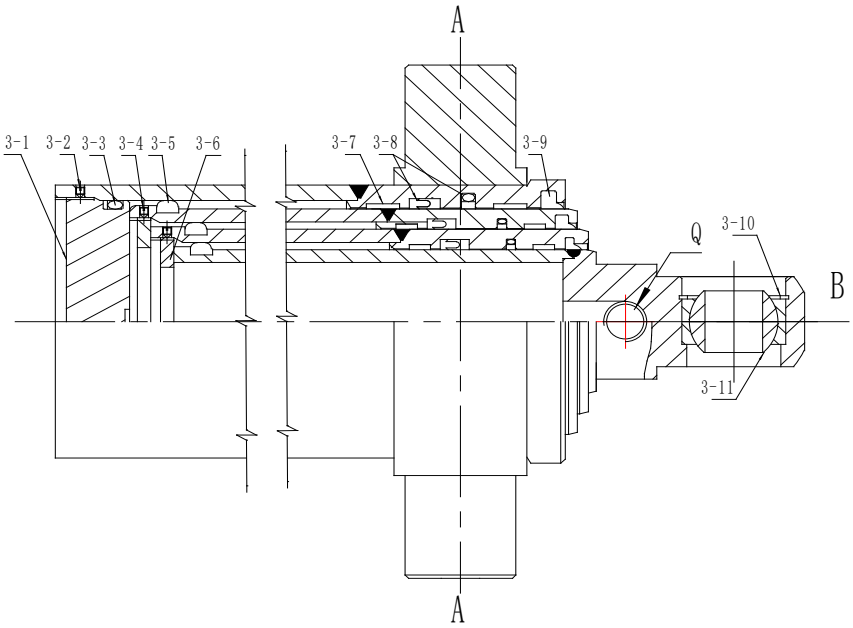

3-1 End cap, 3-2 / 3-4 Set screw, 3-3 End cap seal, 3-5 Ductile iron support ring, 3-6 Adjustable stop ring,
3-7 Guide bush support ring, 3-8 Guide bush seal, 3-9 Dust ring, 3-10 Spring retaining ring, 3-11 Spherical plain bearings

Figure 3. Lifting cylinder diagram of front-mounted two-cylinder lifting system

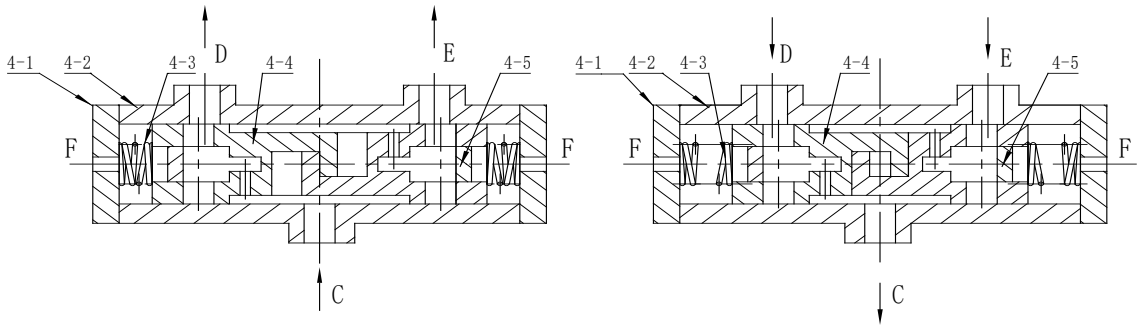

Lift Return

4-1 End cap, 4-2 Housing, 4-3 Return spring, 4-4 Spool, 4-5 Plug.

Figure 4. Collecting and diverting valve working principle diagram

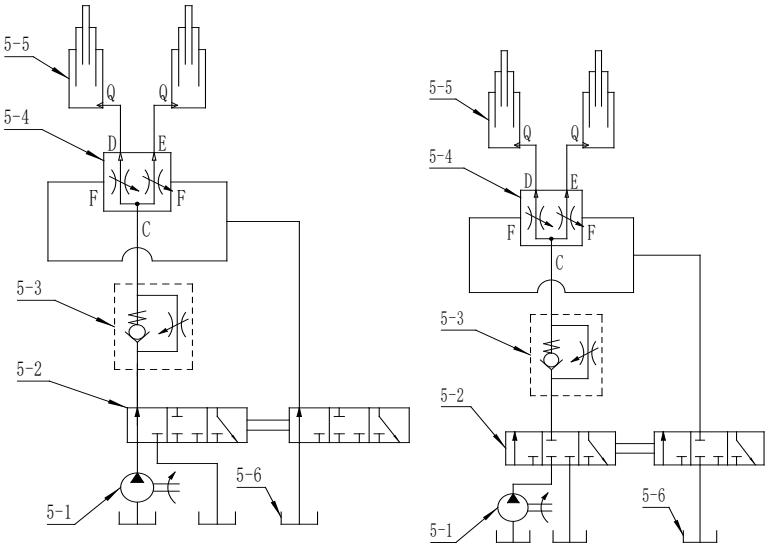

Lifting process Self-locking hover

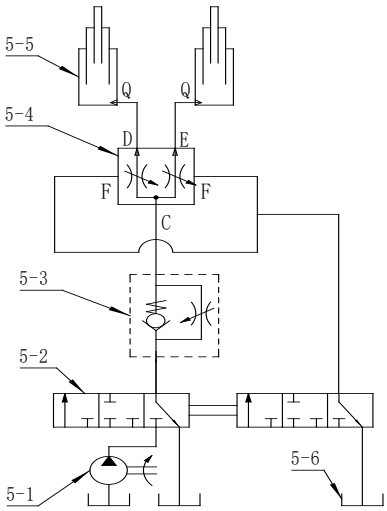

Return process

5-1 Lift pump, 5-2 Double directional valve, 5-3 Slow-down valve, 5-4 Manifold diverter valve, 5-6 Fuel tank.

Figure 5. Working principle of front-mounted double cylinder lifting system

When lifting, the 5-2 dual directional valve is placed on the left: the 5-1 lift pump sucks oil from the 5-6 fuel tank, and supplies the pressure to the oil inlet C of the 5-4 manifold valve through the 5-3 slow-down valve. The 4-3 spool slides to both ends and supplies pressure to the 5-5 lift cylinder through the DE port, which lifts the cargo box. If the eccentric load of the left cylinder is greater

than the right cylinder, the pressure at the CD end will be greater than the CE end. The 4-3 spool moves to the right to increase the oil level at the D port and decrease the oil level at the E port. The thrust of the left cylinder increases and the thrust of the right cylinder decreases. The load rates at both ends are balanced to achieve synchronization. The opposite is also the same principle.

When self-locking hovering, the 5-2 double directional valve is closed in the center. 5-1 The lifting pump is no longer supplying pressure, and the CD end pressure is equal to the CE end under the back pressure of the cargo box. The 4-3 spool is returned to its neutral position by the return spring.

During the return trip, the 5-2 double direction valve is placed to the right, the cargo box is compressed by 5-5 lift cylinders, and the hydraulic oil flows from the 5-5 lift cylinders back to the 5-4 manifold diverter valve to generate back pressure. After the 5-3 slow-down valve restricts the flow, it flows back to the 5-6 fuel tank to control the drop speed of the cargo tank. During the return trip, the 5-3 slow-down valve generates a back pressure on the 5-4 header valve by restricting the flow. When the right cylinder resistance is greater than the left cylinder pressure, the DC back pressure will be greater than the EC back pressure. When the spool moves to the right, the oil level on the D port is reduced, the oil level on the E port is increased, the back pressure at the DC end is increased, and the back pressure at the EC end is reduced. The load rates at both ends are balanced to achieve synchronization. The opposite is the same principle to achieve lifting synchronization [5].

Because the collecting and diverting valve is a normally acting slide valve, there is a movable gap between the 4-2 housing and the 4-4 valve core, and there is an internal leakage. In particular, wear and tear will occur during years of continuous use, and the internal leakage will increase, which will directly affect the self-locking performance. For this reason, a 5-2 double directional valve is selected, and the two pieces of directional valve work synchronously. During the lifting and returning process, the right valve is placed left / right along with the left valve, and the 5-4 header of the diverter valve is connected to the 5-6 fuel tank, so that the gas is discharged smoothly. When self-locking, the right valve closes with the left valve to cut off the oil circuit to prevent internal leakage.

4. Conclusion

The research conclusion of this paper is that the front lift mechanism and the rear two-cylinder direct-thrust mechanism are combined with each other, and the hydraulic control circuit is used to adjust the lift force of the left and right cylinders according to the eccentric load to achieve load balance. Thereby the lateral and longitudinal stability of the dump truck's cargo box is significantly improved during unloading.

References

[1]. Liu Bo. Failure Analysis of Dump Truck Lifting System. Architecture, 2008-10-20. Journal.

[2]. Yuan Fengxia, Si Zhiyuan. Design of Dump Truck Lifting Mechanism. Journal of Chifeng University (Natural Science Edition), 2014-05-10. Journal.

[3]. Guo Wencheng. Failure Analysis of Dump Truck Lifting System. Farm Machinery, 2008-07. Journal.

[4]. Zhu Guangmiao. Stability Analysis of Dump Truck Research. Dalian University of Technology, Professional degree master degree thesis, 2005-12.

[5]. Wang Renfu. Discussion on Several Typical Hydraulic Synchronization Systems. Sichuan Metallurgy, 2007-06-15. Journal.